Name Date

Week: _____ **Problem:** _____

Given:

At the instant shown, $r = 3$ m and $\theta = 30^\circ$. The cartesian components of the velocity of point A are $v_x = 2$ m/s and $v_y = 8$ m/s.

(a) Determine the velocity of point A in terms of polar coordinates.
(b) What is the angular velocity $d\theta/dt$ of the crane at the instant shown?

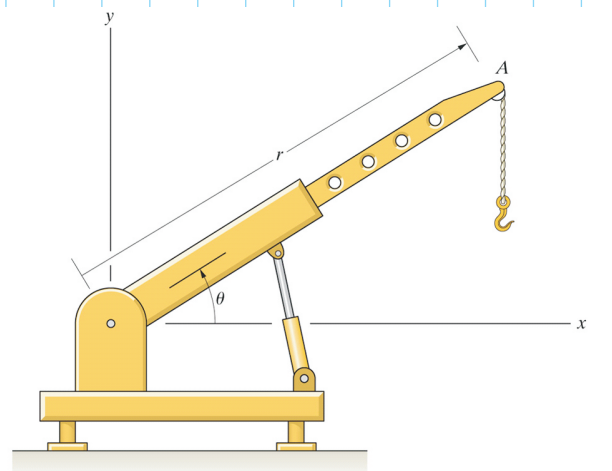

Required:

Solution:

Solution: To transform to polar coordinates we have

$$v_r = v_x \cos\theta + v_y \sin\theta = (2 \text{ m/s}) \cos 30^\circ + (8 \text{ m/s}) \sin 30^\circ = 5.73 \text{ m/s}.$$

$$v_\theta = -v_x \sin\theta + v_y \cos\theta = -(2 \text{ m/s}) \sin 30^\circ + (8 \text{ m/s}) \cos 30^\circ = 5.93 \text{ m/s}.$$

$$\boxed{\mathbf{v}_A = (5.73\mathbf{e}_r + 5.93\mathbf{e}_\theta)\text{m/s}.}$$

The angular velocity is found

$$v_\theta = r\frac{d\theta}{dt} \Rightarrow \frac{d\theta}{dt} = \frac{v_\theta}{r} = \frac{5.93 \text{ m/s}}{3\text{m}} = 1.98 \text{ rad/s}.$$

$$\boxed{\frac{d\theta}{dt} = 1.98 \text{ rad/s}.}$$