Section 1.2

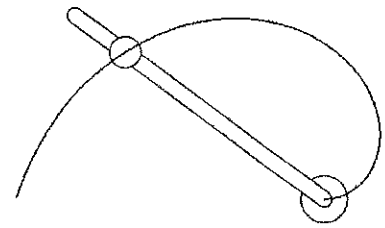

Radial and Transverse Components: Sliding Collar on Rotating Arm

1.2-1 Introduction

[1] Consider an **Arm** rotating about a **Pivot** with an angular speed $\dot{\theta} = \pi$ rad/s [2-4]. A **Collar** initially aligned with the **Pivot** slides along the **Arm** with a constant speed $\dot{r} = 1.0$ m/s [5-6].

Let's use a polar coordinate system centered at the **Pivot** and let (r, θ) be the position of the **Collar's** center. Denote $\vec{e}_r$ the unit vector in radial direction and $\vec{e}_\theta$ the unit vector in transversal direction [7, 8]. Then the position, velocity, and acceleration of the **Collar's** center are respectively

$$\begin{aligned} \vec{r} &= r\vec{e}_r \\ \vec{v} &= \dot{r}\vec{e}_r + r\dot{\theta}\vec{e}_\theta \\ \vec{a} &= (\ddot{r} - r\dot{\theta}^2)\vec{e}_r + (r\ddot{\theta} + 2\dot{r}\dot{\theta})\vec{e}_\theta \end{aligned} \tag{1}$$

Let's calculate these values at an arbitrary time, say $t = 0.8$ s. At that time [9, 10],

$$\begin{aligned} r &= 0.8 \text{ m} & \theta &= 0.8\pi \\ \dot{r} &= 1.0 \text{ m/s} & \dot{\theta} &= \pi \text{ rad/s} \\ \ddot{r} &= 0 \text{ m/s}^2 & \ddot{\theta} &= 0 \text{ rad/s}^2 \end{aligned}$$

Then, the position is

$$\begin{aligned} \vec{r} &= r\vec{e}_r \\ &= 0.8\vec{e}_r \\ &= 0.8(\cos 144^\circ)\vec{i} + 0.8(\sin 144^\circ)\vec{j} \\ &= -0.647\vec{i} + 0.470\vec{j} \end{aligned} \tag{2}$$

where $\vec{i}$ is the unit vector in X-direction and $\vec{j}$ is the unit vector in Y-direction. The origin of the XY-coordinate system is the same as that of the polar coordinate system.

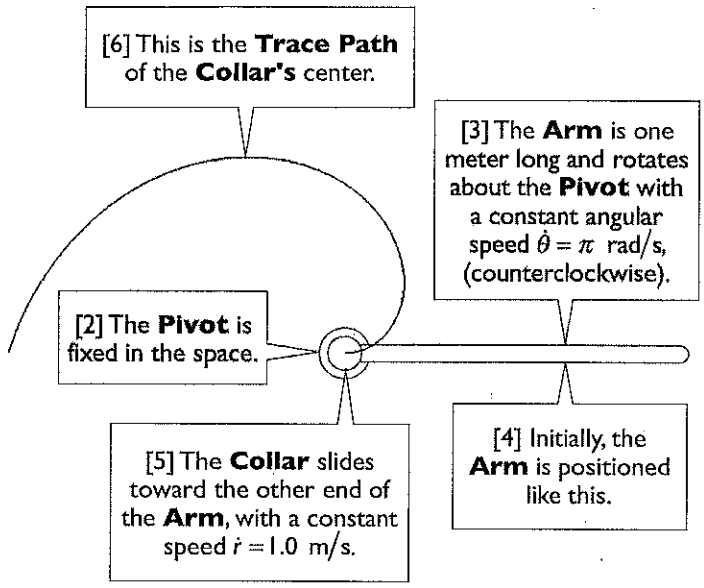

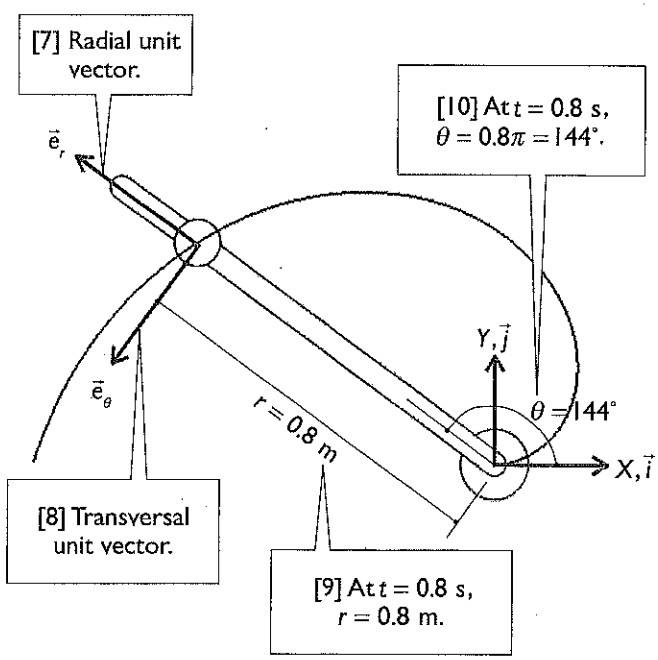

[11] The velocity is [12]

$$\begin{aligned}\vec{v} &= \dot{r}\vec{e}_r + r\dot{\theta}\vec{e}_\theta \\ &= 1.0\vec{e}_r + 0.8\pi\vec{e}_\theta \\ &= 1.0\vec{e}_r + 2.513\vec{e}_\theta \\ &= (\cos 144^\circ\vec{i} + \sin 144^\circ\vec{j}) \\ &\quad +(-2.513\sin 144^\circ\vec{i} + 2.513\cos 144^\circ\vec{j}) \\ &= -2.286\vec{i} - 1.445\vec{j}\end{aligned} \tag{3}$$

The acceleration is [13]

$$\begin{aligned}\vec{a} &= (\ddot{r} - r\dot{\theta}^2)\vec{e}_r + (r\ddot{\theta} + 2\dot{r}\dot{\theta})\vec{e}_\theta \\ &= \left[0 - 0.8(\pi)^2\right]\vec{e}_r \\ &\quad +\left[0.8(0) + 2(1.0)(\pi)\right]\vec{e}_\theta \\ &= -7.896\vec{e}_r + 6.283\vec{e}_\theta \\ &= (-7.896\cos 144^\circ\vec{i} - 7.896\sin 144^\circ\vec{j}) \\ &\quad +(-6.283\sin 144^\circ\vec{i} + 6.283\cos 144^\circ\vec{j}) \\ &= 2.695\vec{i} - 9.724\vec{j}\end{aligned} \tag{4}$$

In this section, we'll perform a simulation for this system and validate the simulation results with the values in Eqs. (2-4).

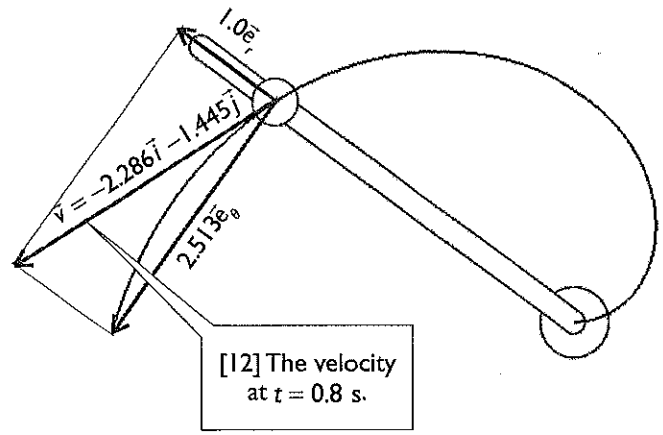

[12] The velocity at $t = 0.8$ s.

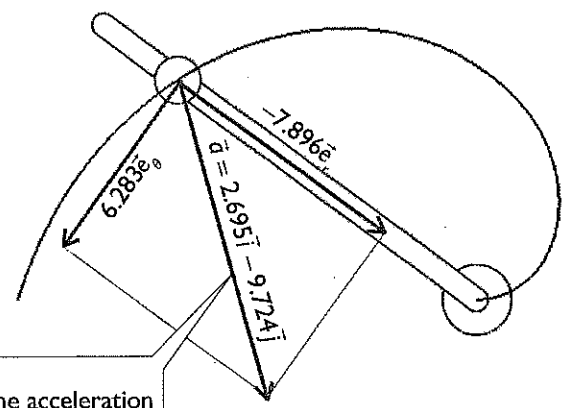

[13] The acceleration at $t = 0.8$ s. #

1.2-2 Start Up and Create a Part: **Pivot**

[1] Launch **SOLIDWORKS** (1.1-2[1], page 6) and click **New** to create a new **Part**. Set up **MMGS** unit system with zero decimal places for the length unit (1.1-3, page 7).

[2] On the **Front** plane, draw a circle like this.

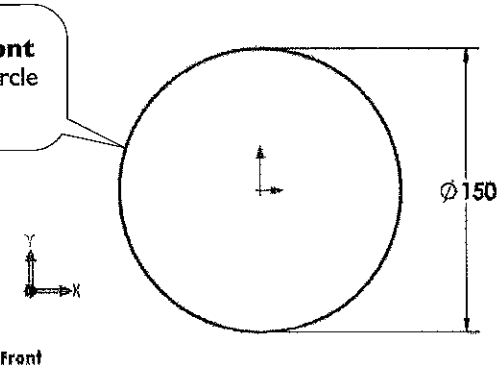

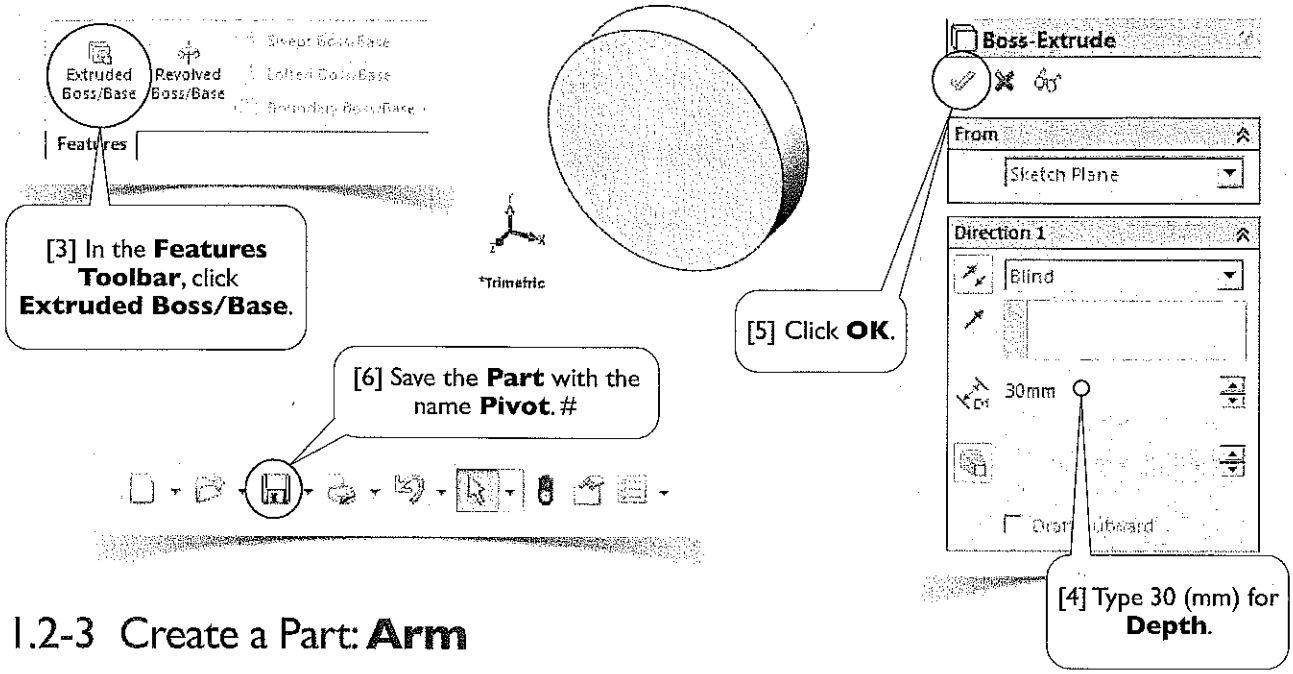

1.2-3 Create a Part: **Arm**

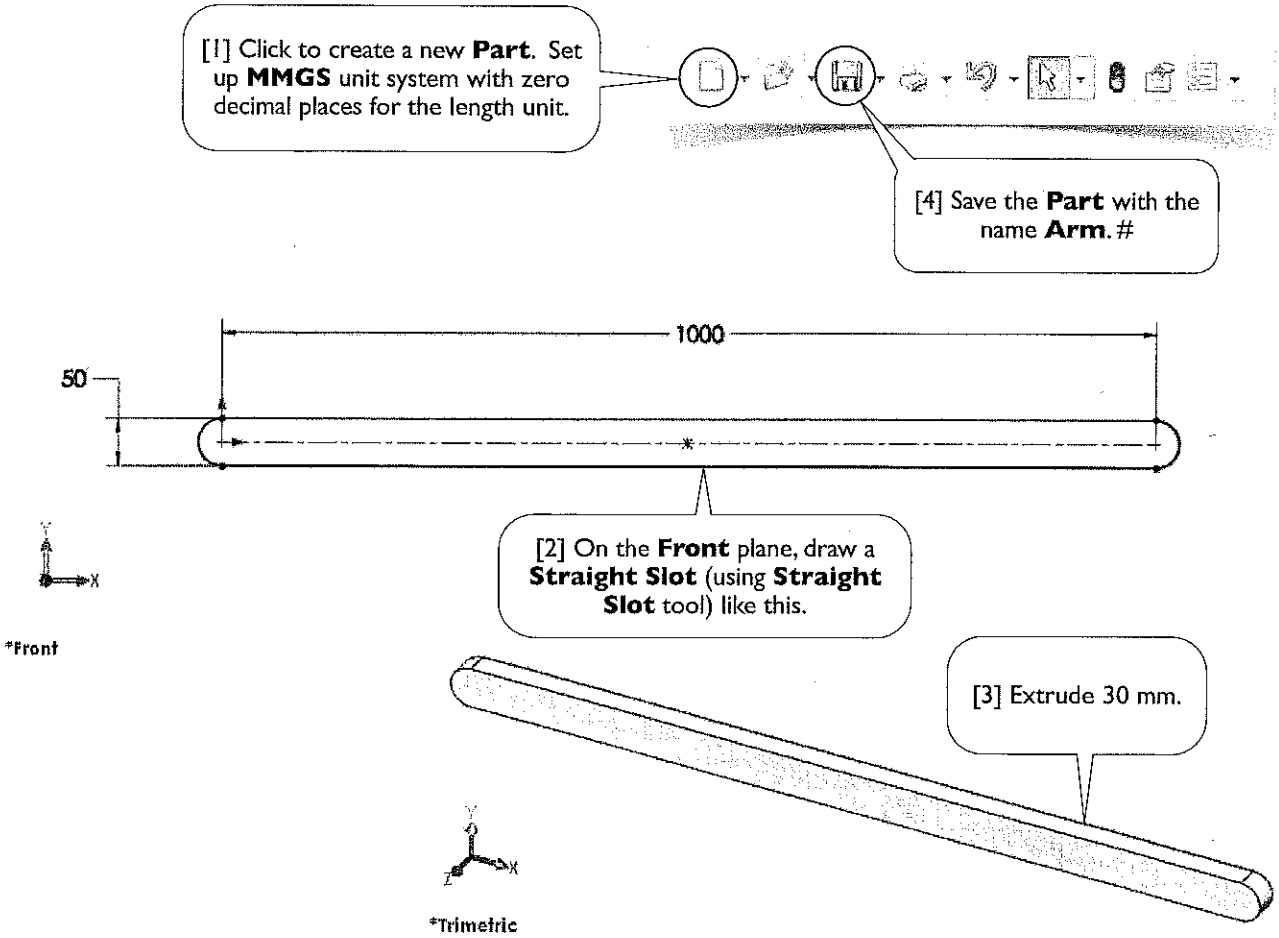

1.2-4 Create a Part: **Collar**

[1] Create a new **Part**. Set up **MMGS** unit system with zero decimal places for the length unit.

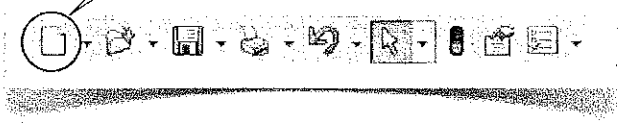

[2] On the **Front** plane, draw a circle like this.

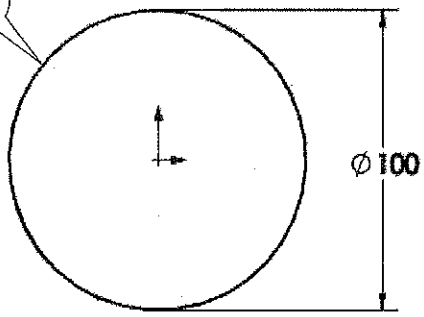

[3] Extrude 30 mm.

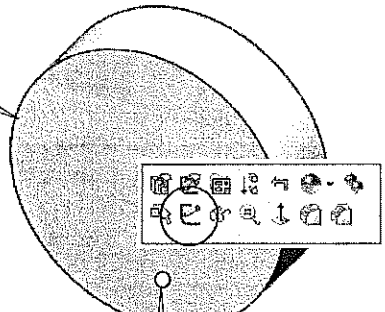

[4] Right-click this face and select **Sketch**.

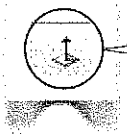

[5] In the **Standard Views Toolbar**, click **Normal To** (1.1-6[2], page 10).

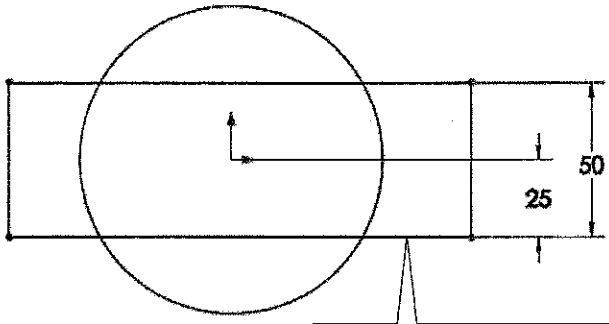

[6] Draw a rectangle like this. The width of the rectangle is not important.

[7] In **Features Toolbar**, click **Extruded Cut**.

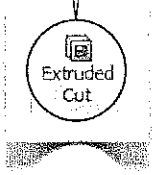

[9] Save the **Part** with the name **Collar**.#

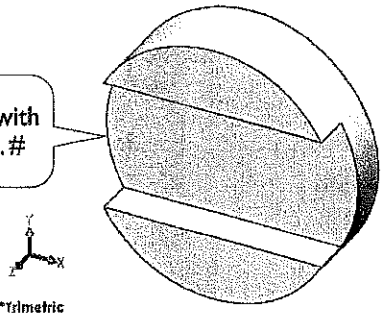

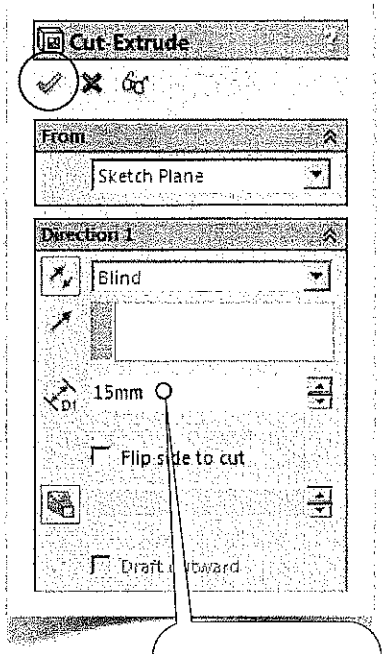

[8] Type 15 (mm). Click **OK**.

1.2-5 Create an Assembly: **Collar-On-Arm**

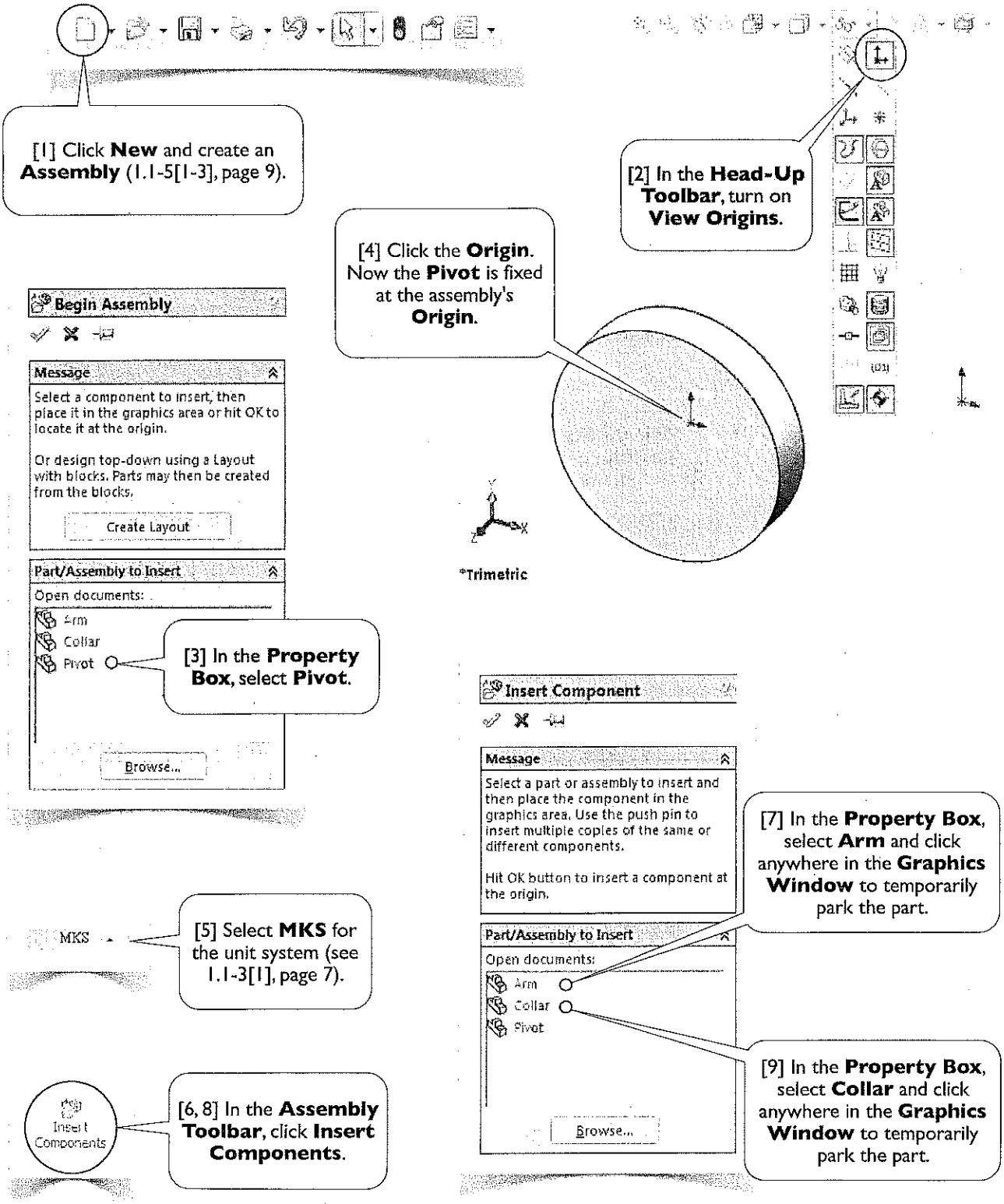

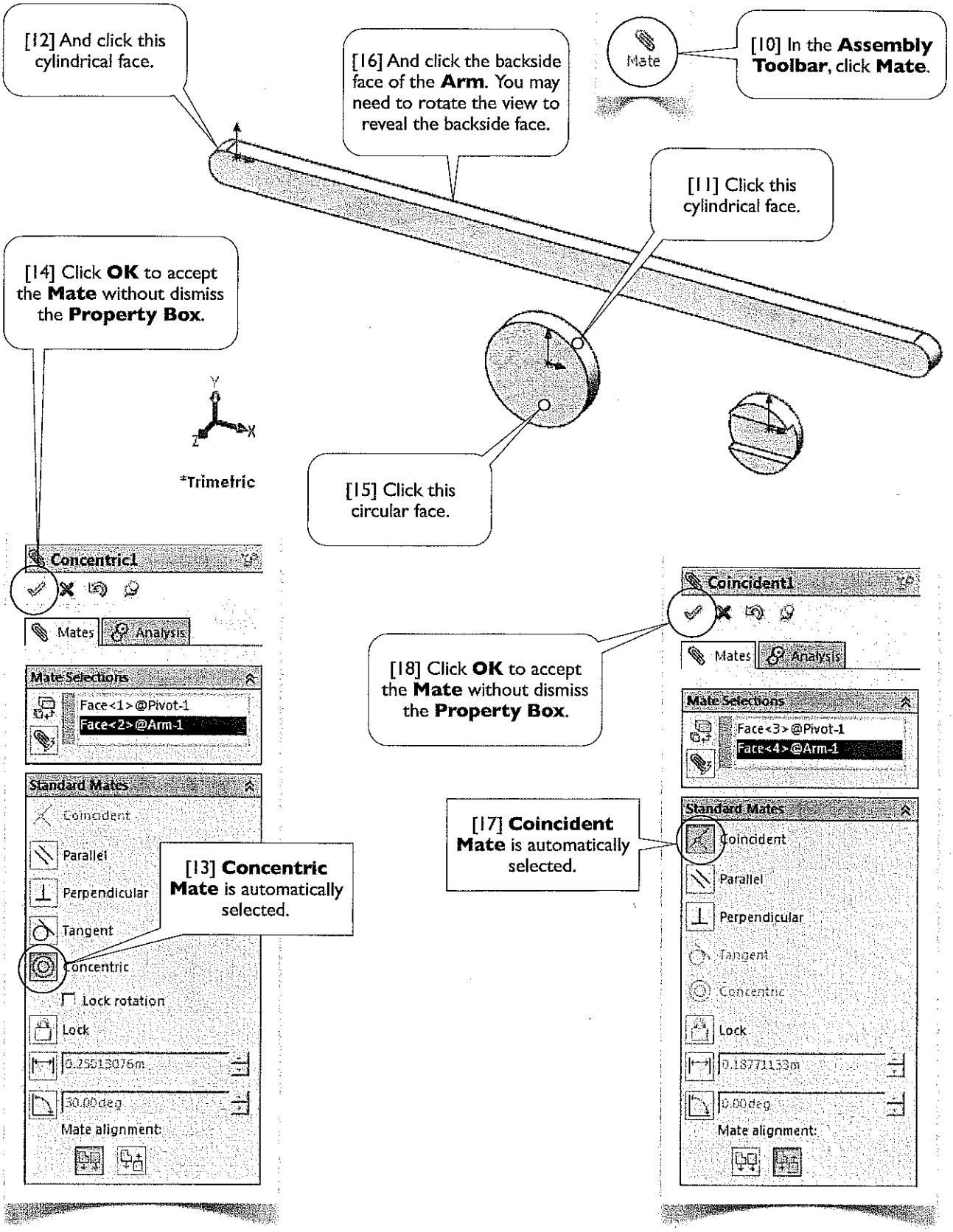
[12] And click this cylindrical face.
[16] And click the backside face of the **Arm**. You may need to rotate the view to reveal the backside face.
Mate
[10] In the **Assembly Toolbar**, click **Mate**.
[11] Click this cylindrical face.
[14] Click **OK** to accept the **Mate** without dismiss the **Property Box**.
*Trimetric
[15] Click this circular face.
Concentric1
Mates
Analysis
Mate Selections
Face<1>@Pivot-1
Face<2>@Arm-1
Standard Mates
Coincident
Parallel
Perpendicular
Tangent
Concentric
Lock rotation
Lock
0.25013076m
30.00deg
Mate alignment:
[13] **Concentric Mate** is automatically selected.
[18] Click **OK** to accept the **Mate** without dismiss the **Property Box**.
Coincident1
Face<3>@Pivot-1
Face<4>@Arm-1
[17] **Coincident Mate** is automatically selected.
0.18771133m
0.00deg

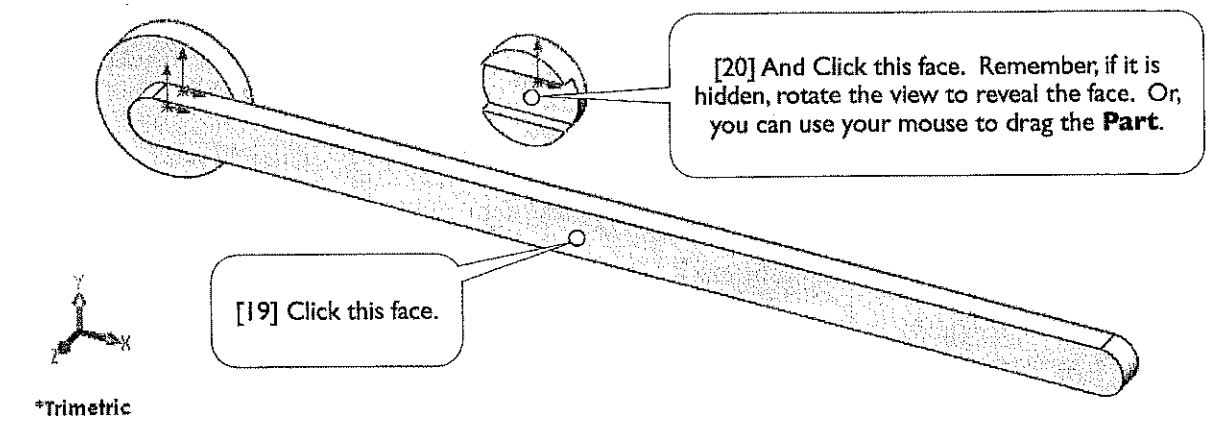
[20] And Click this face. Remember, if it is hidden, rotate the view to reveal the face. Or, you can use your mouse to drag the **Part**.
[19] Click this face.
*Trimetric

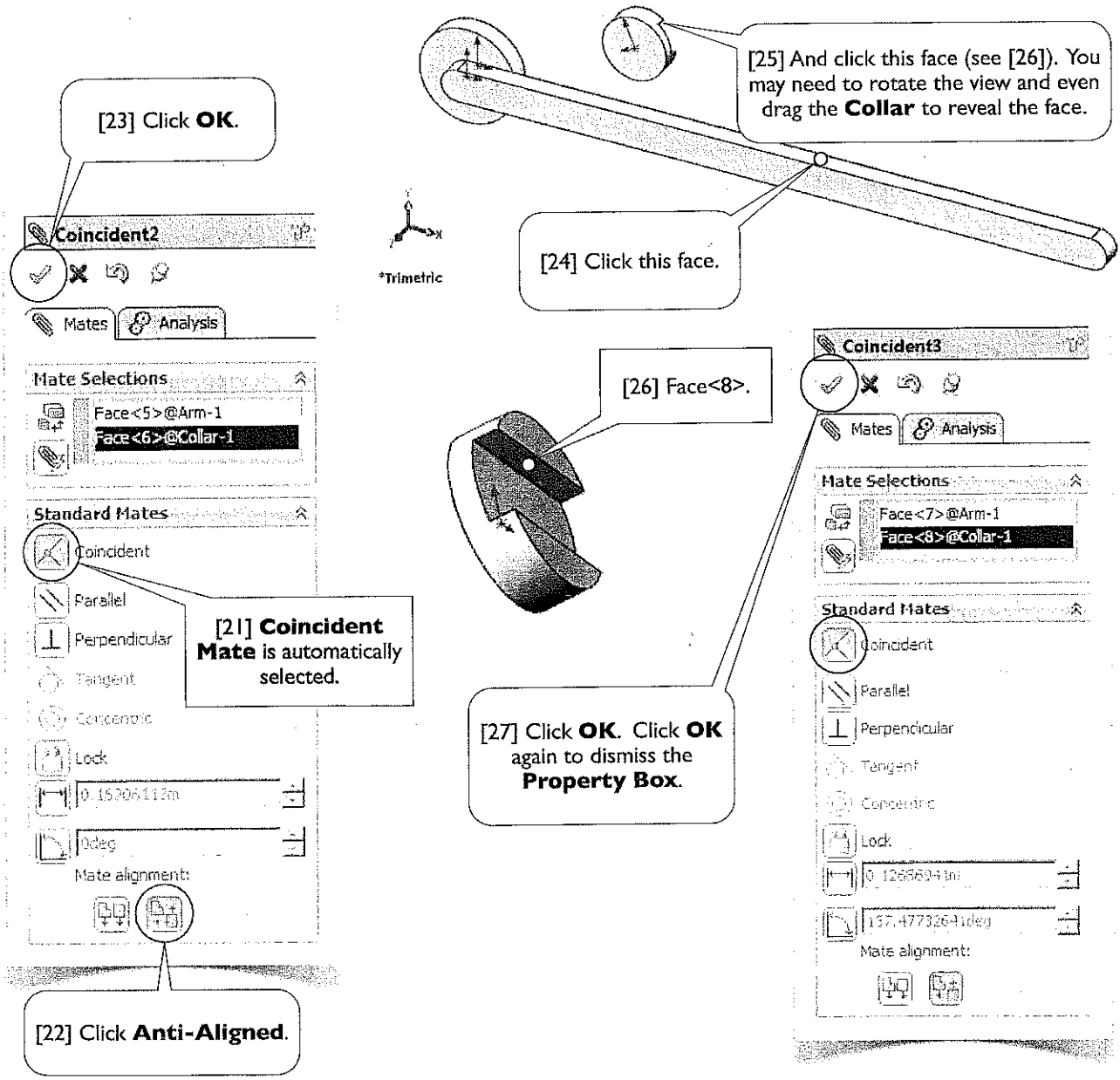
[23] Click **OK**.
Coincident2
Mates
Analysis
Mate Selections
Face<5>@Arm-1
Face<6>@Collar-1
Standard Mates
Coincident
Parallel
Perpendicular
Tangent
Concentric
Lock
0.15706113m
0deg
Mate alignment:
[21] **Coincident Mate** is automatically selected.
[22] Click **Anti-Aligned**.
[25] And click this face (see [26]). You may need to rotate the view and even drag the **Collar** to reveal the face.
*Trimetric
[24] Click this face.
[26] Face<8>.
[27] Click **OK**. Click **OK** again to dismiss the **Property Box**.
Coincident3
Mates
Analysis
Mate Selections
Face<7>@Arm-1
Face<8>@Collar-1
Standard Mates
Coincident
Parallel
Perpendicular
Tangent
Concentric
Lock
0.12686941m
137.4773264deg
Mate alignment:

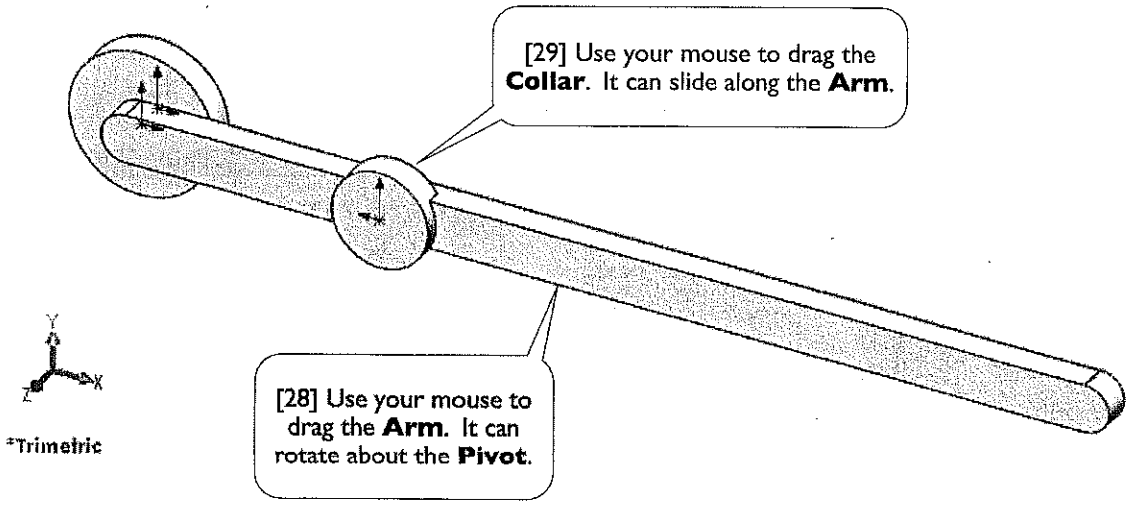

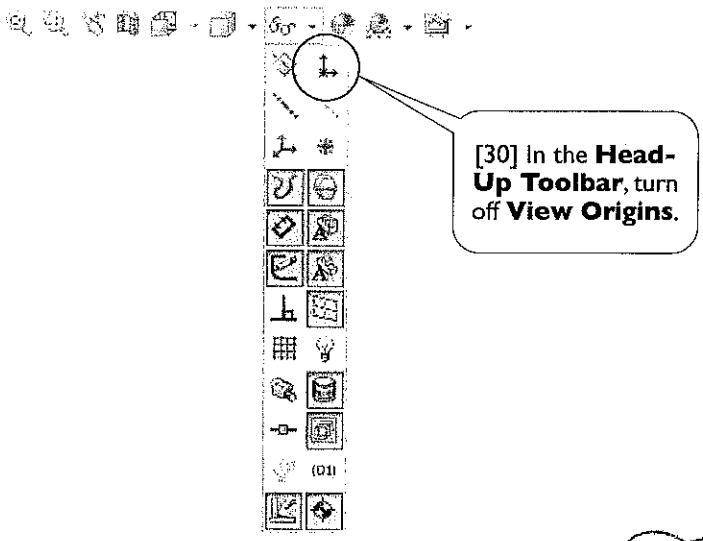

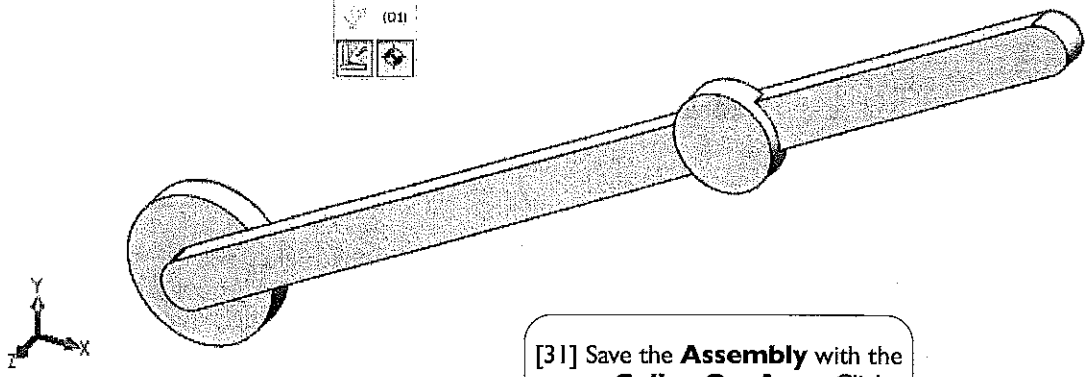

[31] Save the **Assembly** with the name **Collar-On-Arm**. Click **Rebuild** if a warning window shows up. #

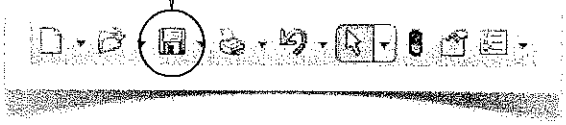

1.2-6 Set Up Initial Positions

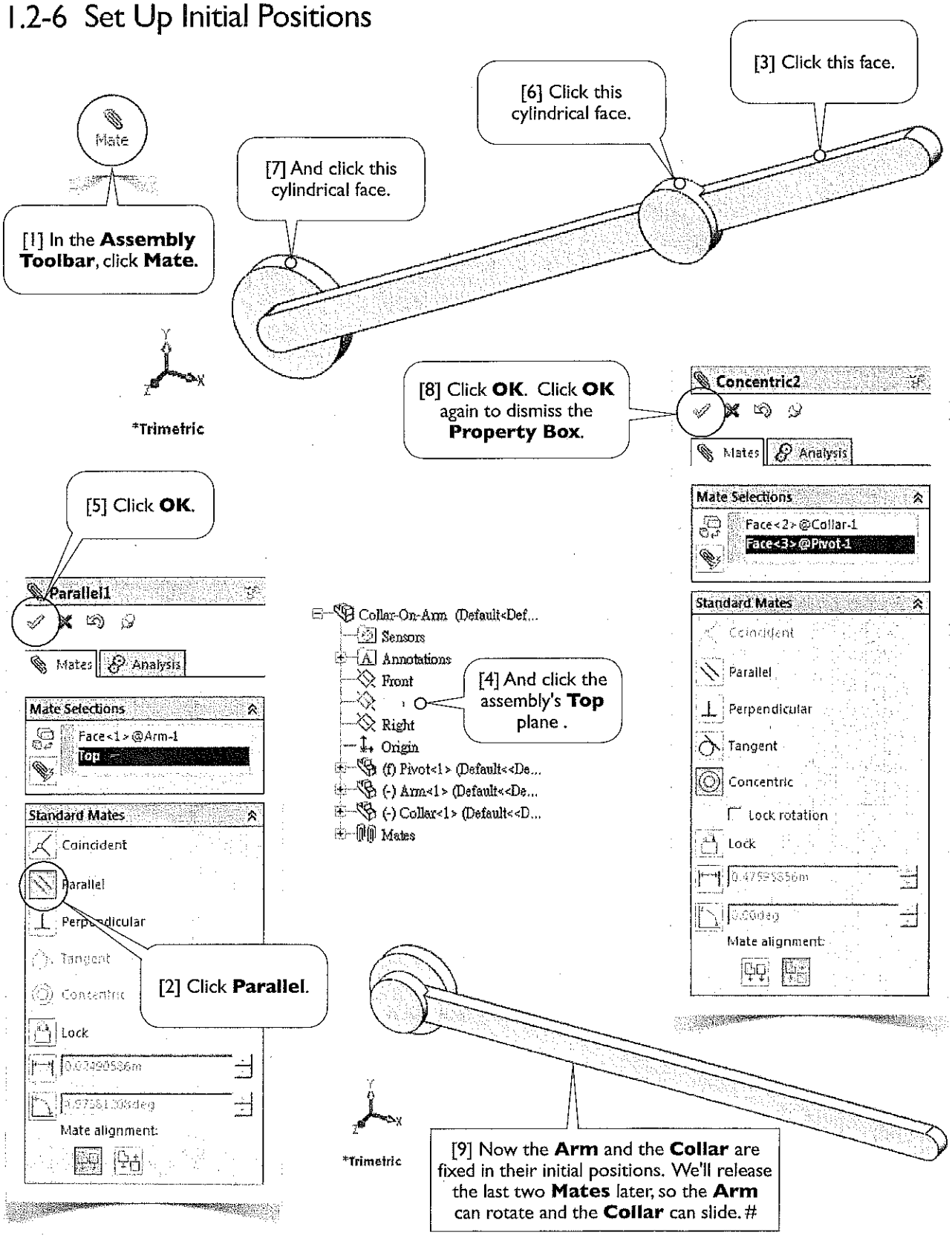

1.2-7 Create a **Motion Study**

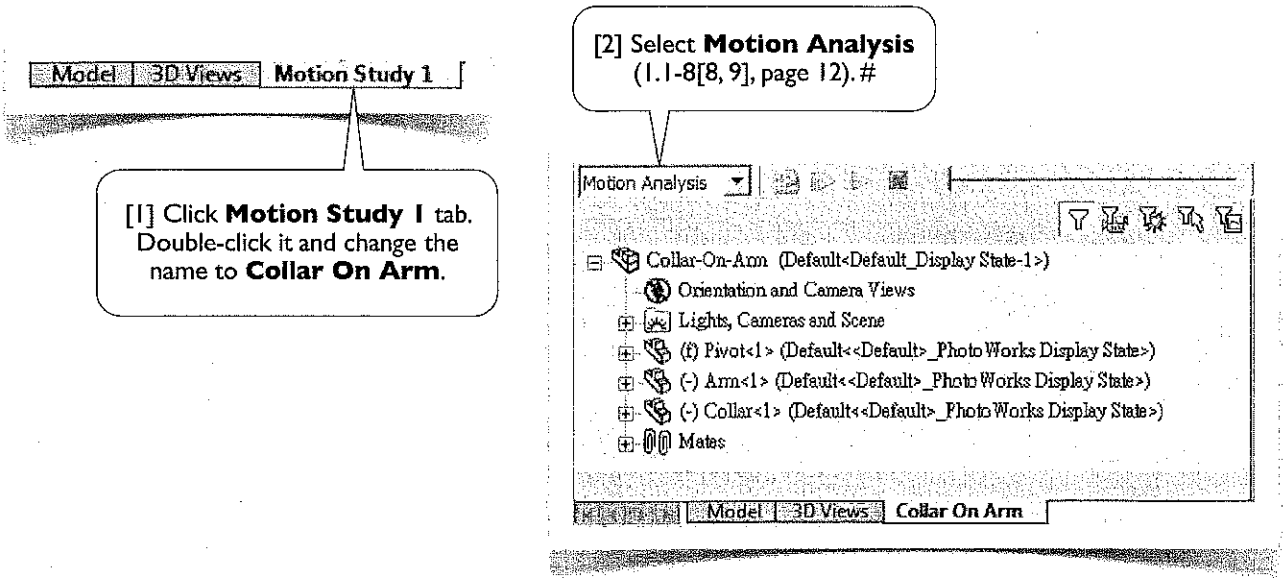

1.2-8 Set Up **Motor** at the **Arm**

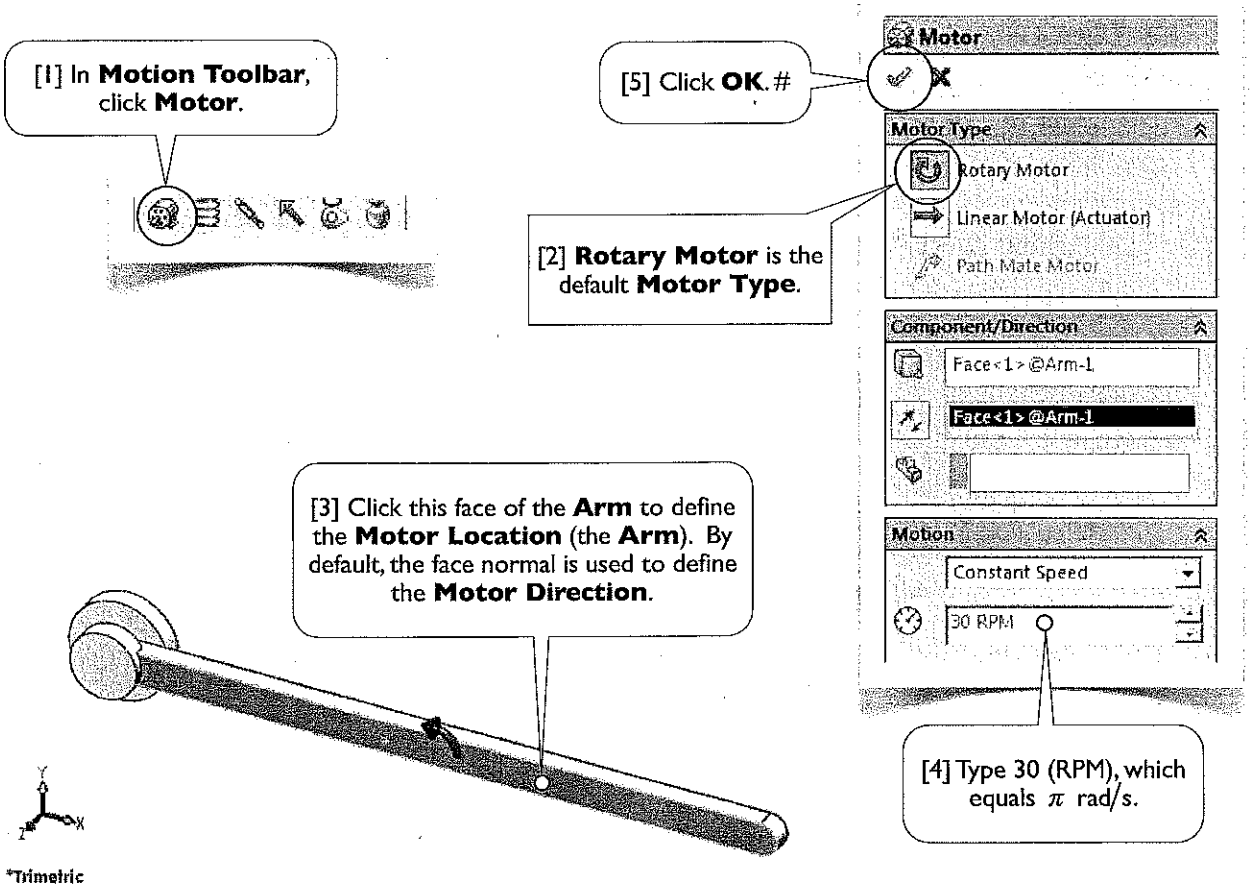

1.2-9 Set Up **Motor** at the **Collar**

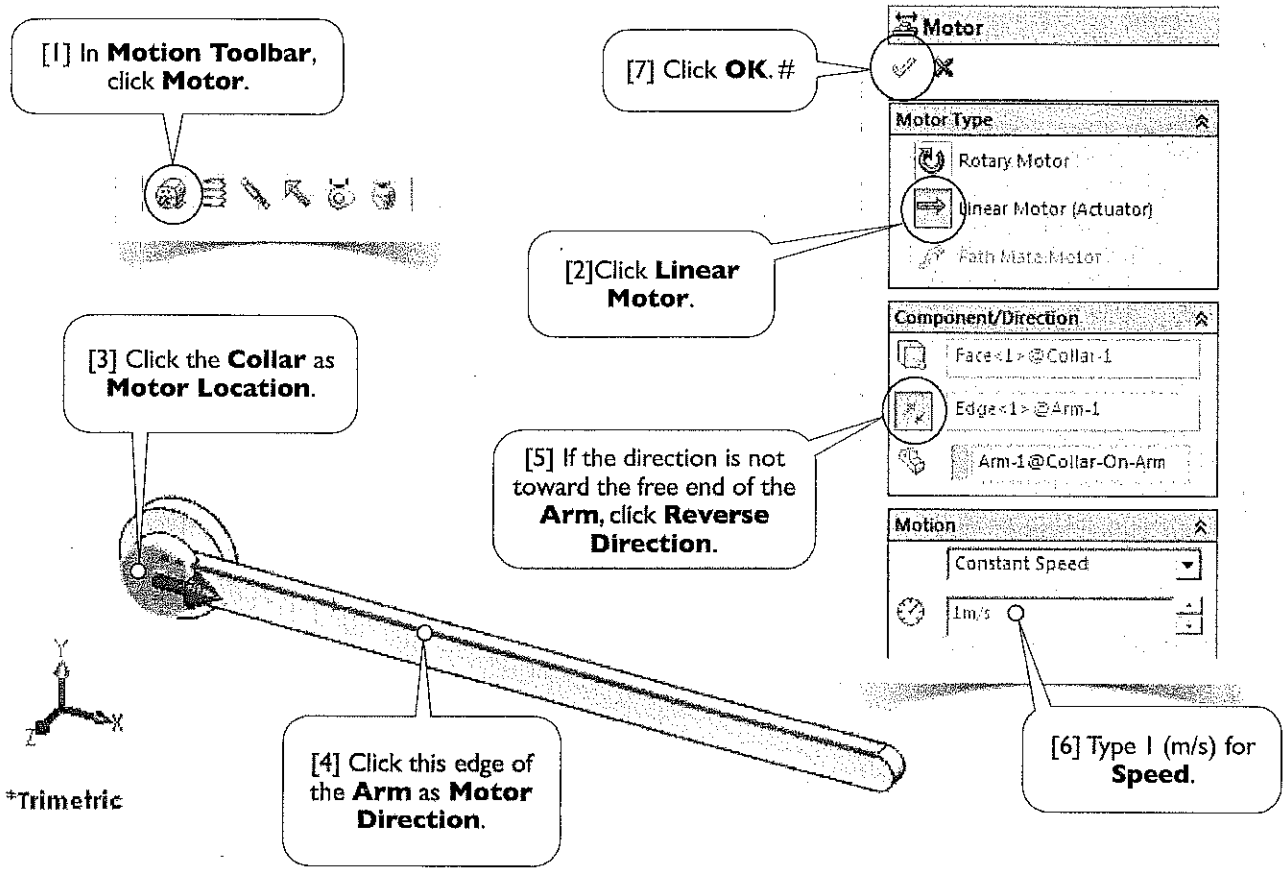

1.2-10 Calculate and Animate **Results**

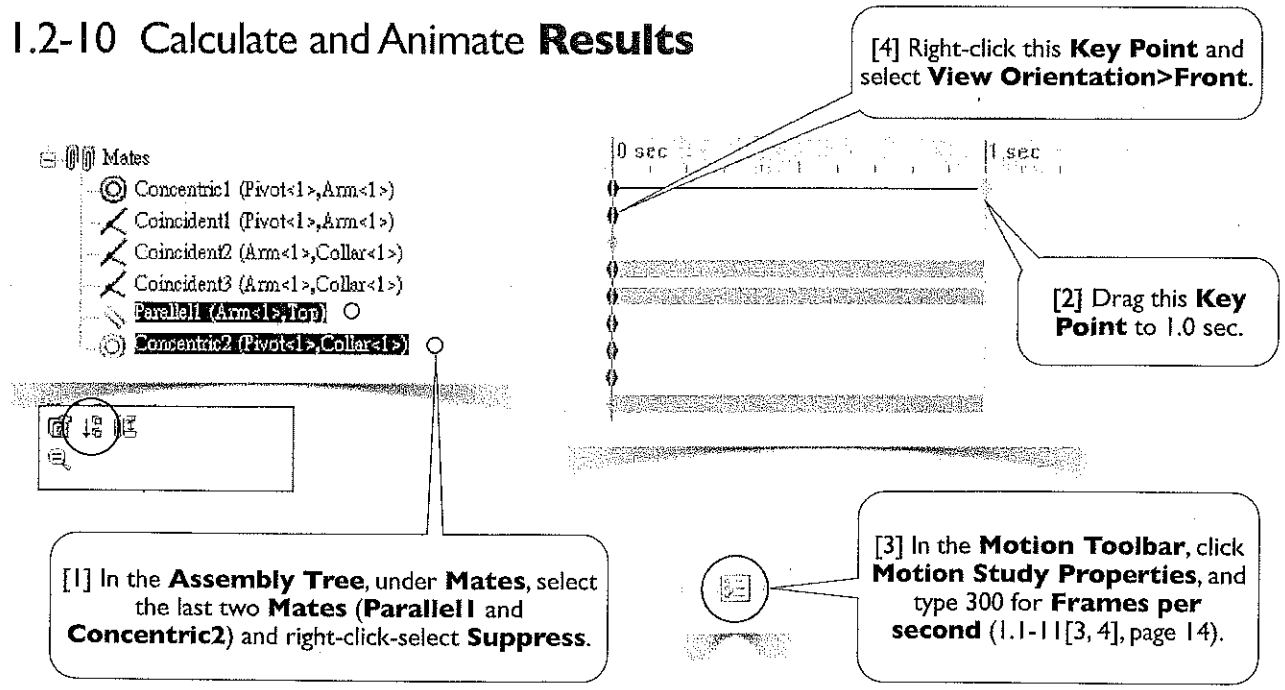

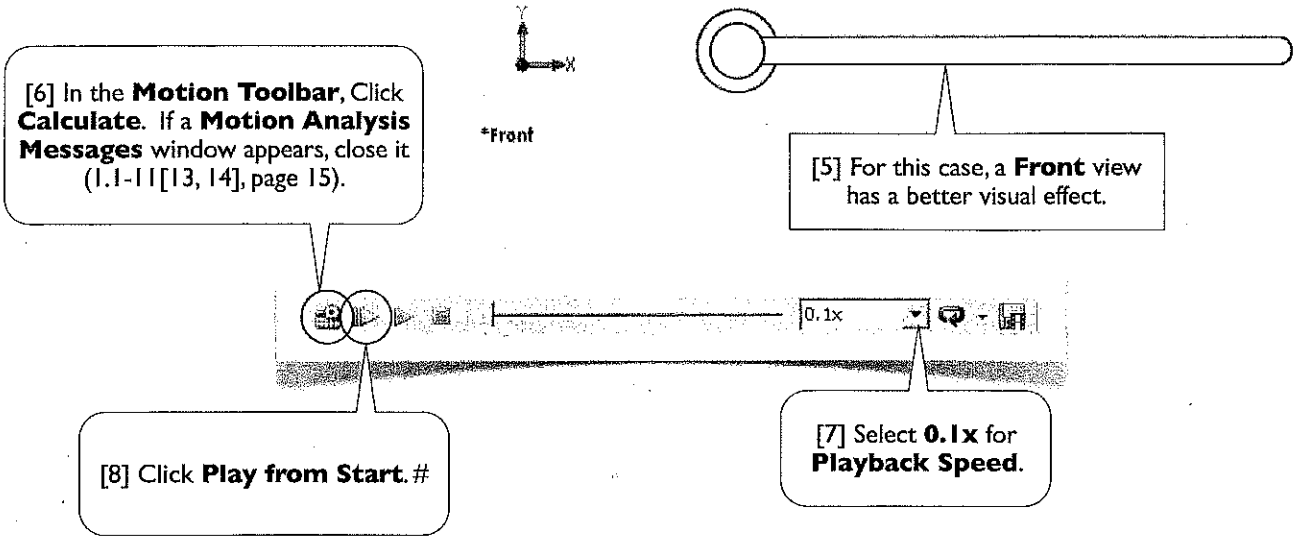

1.2-11 Results: **Trace Path**

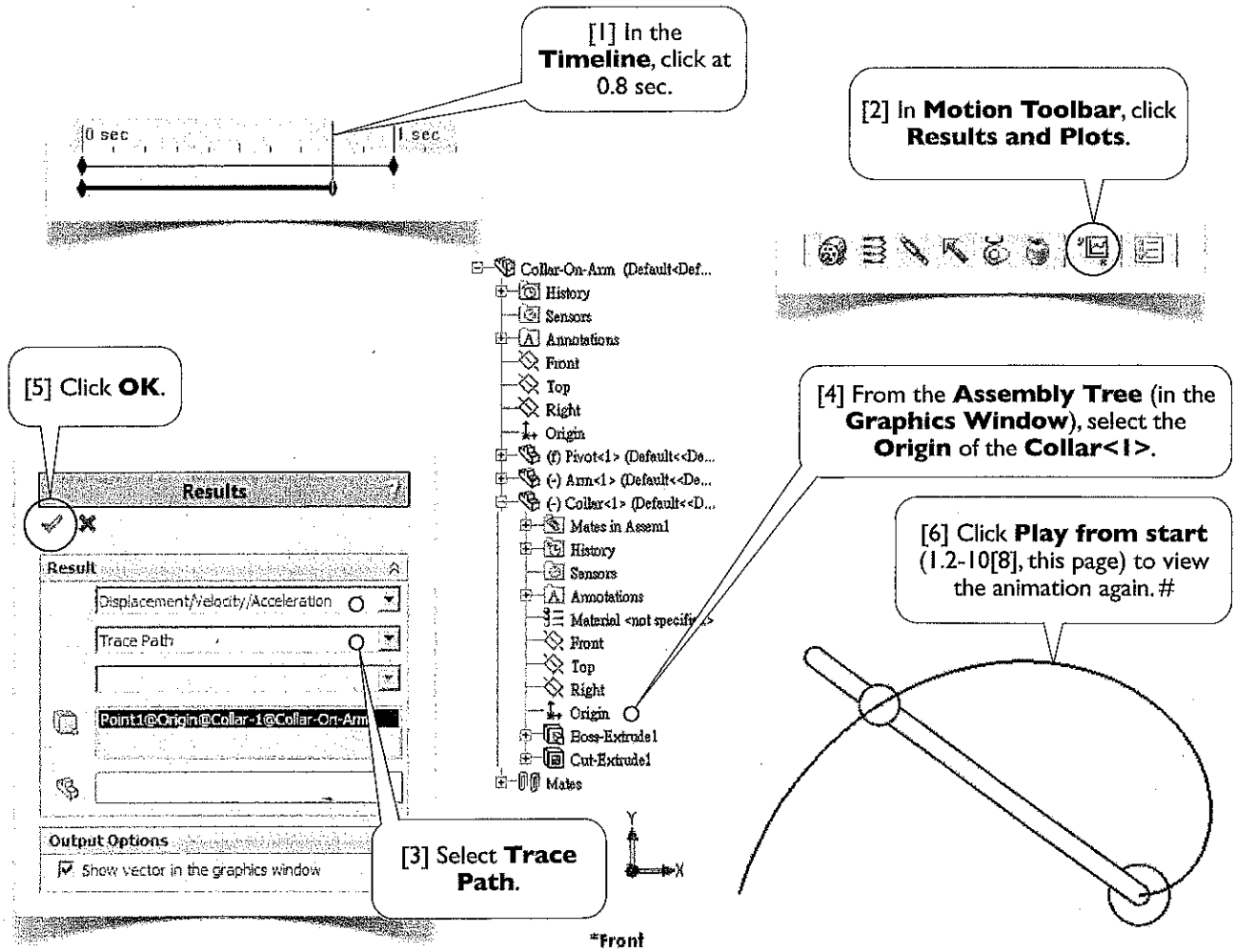

1.2-12 Results: **Acceleration**

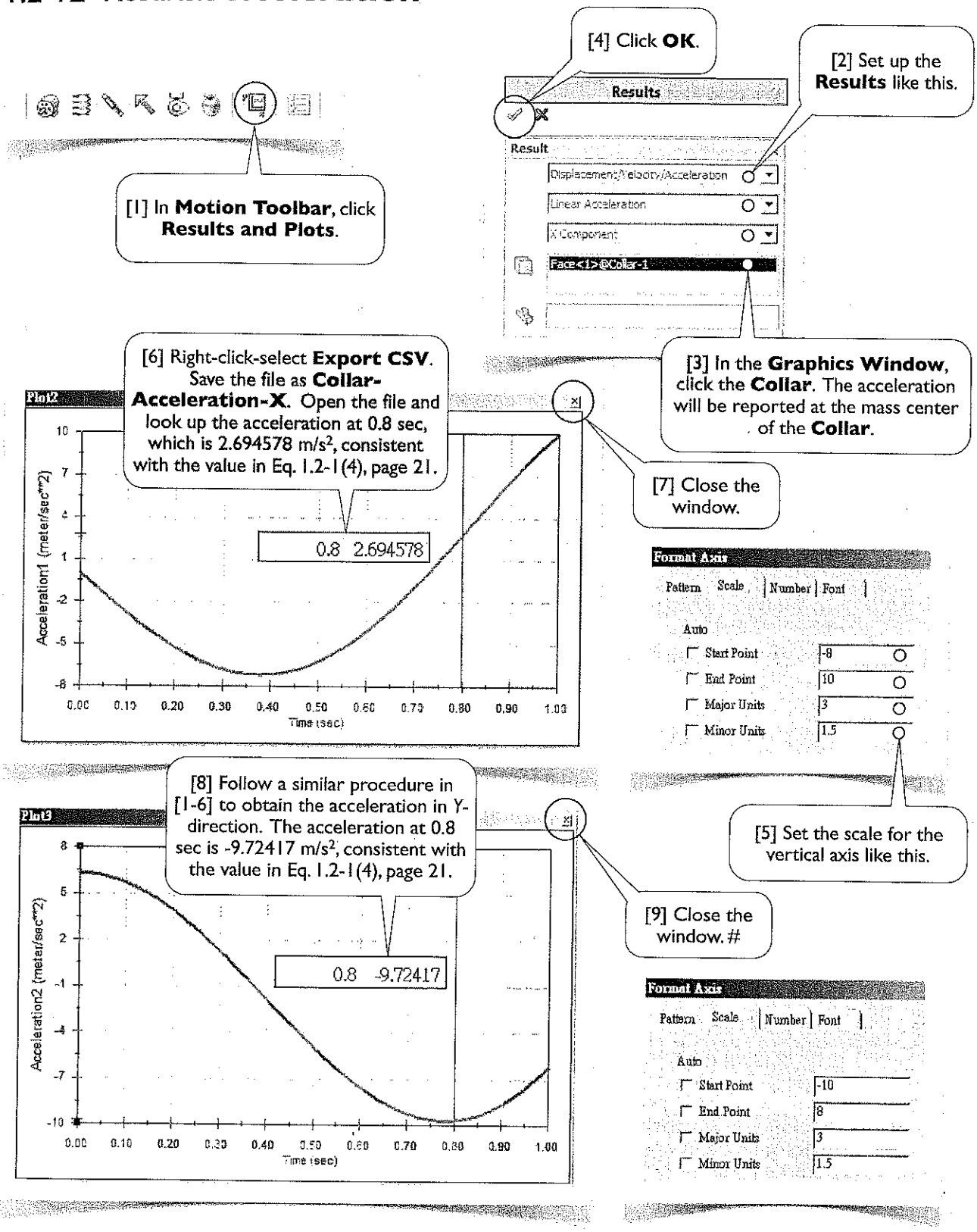

1.2-13 Do It Yourself

[1] We leave you to obtain the velocities (Eq. 1.2-1(3), page 21) and the positions (Eq. 1.2-1(2), page 20). These plots are shown in [2-5].

[2] Velocity in *X*-direction.

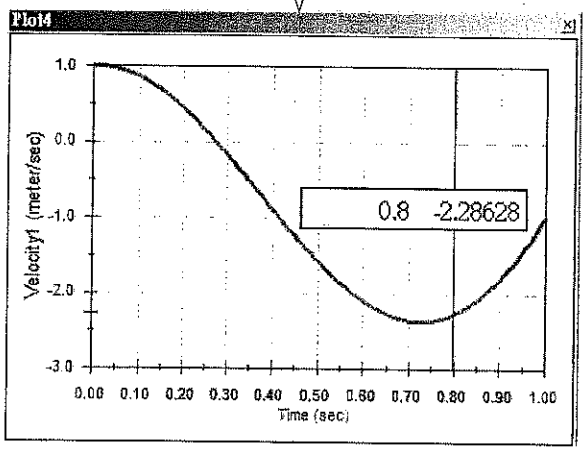

[3] Velocity in *Y*-direction.

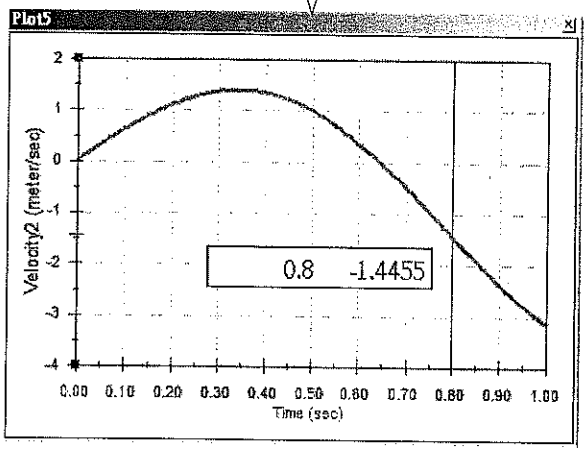

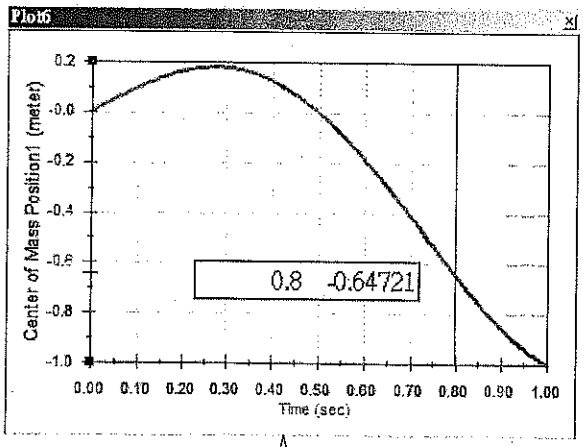

[4] Position in *X*-direction.

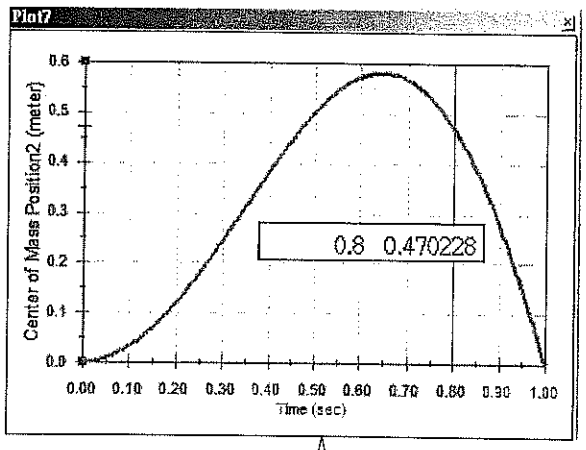

[5] Position in *Y*-direction.

Wrap Up

[6] Save all files and exit **SOLIDWORKS** (1.1-18[1-3], page 19). #